ISO 9001
Certified
Company

Smartlock®

BMS BURNS

Slide Retainer & Limit Switch

General Description

Smartflow® Smartlock® slide retainer and limit switch is designed for injection molders to provide switching and a slide detent in one unique package. The Smartlock® locking function prevents premature slide movement during molded part ejection while the SPDT switch is simultaneously actuated. The Smartlock® slide retainer and limit switch has been tested for reliability over 10 million cycles without failure. Two or more switches may be used for larger molds or mold with multiple slides. Increased safety and prevention of mold damage result when the Smartlock® slide lock and limit switch is installed in the mold.

Specifications

Break Away Force..... 17 to 27 lbs. (Adjustable)
Electrical..... 250VAC / 28VDC
4 Amps inductive, 5 Amps resistive
Operating Temperature
Standard Model SL-222.....175°F max (79.4°C max)
High Temp Model SL-291..... 250°F max (121°C max)

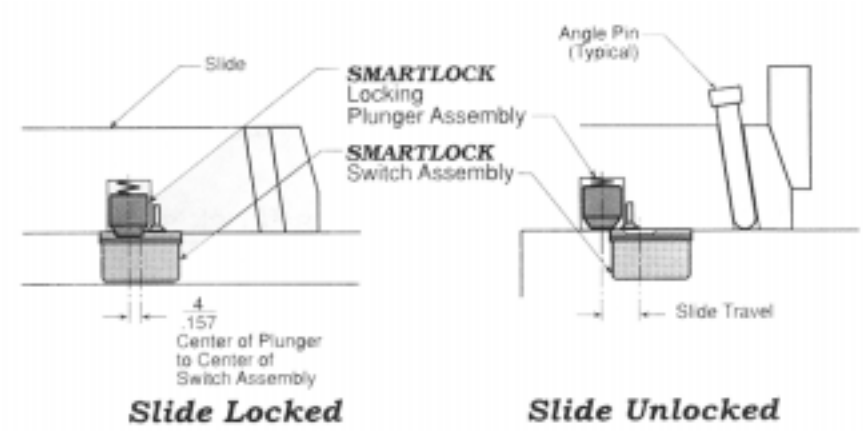

Materials

Switch Assembly Body
-Fiberglass reinforced nylon.
Locking Plate
-Hardened steel.
Locking Plunger Assembly
-Hardened steel.
Wire Leads
-22 ga. stranded, 3 conductor, shielded cable, 6 ft. long, ends stripped and tinned.

Features and Benefits

- Over 10 million cycle life provides long dependable service.
- 17-27 pounds holding force: adjustable for optimum operation.
- 175°F (79.4°C) standard temperature rating allows installation into most molding applications.
- 250°F (121°C) high temperature unit provides additional application flexibility.
- Superior flush mount switch shielded from damage by mounting inside a protective milled pocket.
- Stripped and tinned 6 ft. wire leads make the switch ready to install without modification.
- Included mounting screws and wire clips help install the Smartlock® switch easily.

Part Number	Description	Price
SL-222	Standard Smartlock	124.00
SL-291	High Temp. Smartlock	135.00

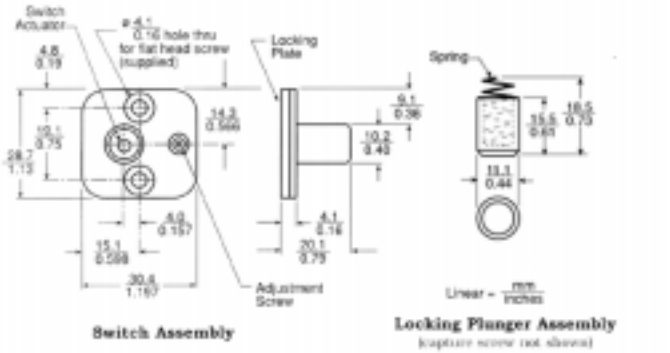

BMS BURNS
1061 Industrial Parkway, Medina, Ohio 44256, U.S.A.
Phone: 330-722-1182 • **Toll Free: 800-345-7693**
Fax: 330-725-2723 • **Toll Free Fax: 800-581-9264**
E-mail: customerservice@bmsburns.com

ORDER TOLL FREE
1-800-345-7693